COMEX GROUP

TUTTO UN ALTRO CLIMA

IESI

HEAT RECOVERY SYSTEMS

IESI - Technical information

- **IESI** is an advantageous application in the recovery of thermal energy of the fumes produced by different combustions or production processes such as: smelting furnaces, heating furnaces, heat treatment furnaces, food production ovens, glassworks, cogeneration and trigeneration systems, generators or other situations, which normally envisage the waste disposal of energy resources into the atmosphere

- The core of the **IESI** consists of a monoblock thermal group, consisting of "Patented" AISI 316 stainless steel plate-type exchangers, which can be dismantled to allow extraordinary maintenance

- **IESI** in its operation, as a heat energy recovery unit, is crossed by the hot fumes that strike the plate-type exchangers and convey the available heat to the water with temperatures that reach up to 110°C and with a recovery of the thermal energy up to 90% and above of the source

- Via the recovery of the sensitive heat contained in the fumes and of the latent heat (if condensation is required), it is possible to increase the overall efficiency of the system by up to 107%, thus being able to take advantage of the economic benefits provided by the specific regulations or tax benefits

- **IESI** is produced in 2 versions: IESI static or IESI dynamic

- **IESI** static is built with plate heat exchangers, manifold fumes, water collectors and fitting. IESI works at the pressure and flow rate of the fumes induced from the source.

- **IESI** dynamic also includes an appropriately sized fume exhaust fan which is used to obtain an adequate hydraulic flow rate and head, in order to guarantee a constant heat recovery over time.

- **IESI** is sized to recover the thermal energy from 20 to 1500 kW of hot water with minimum fume temperatures of 120°C

- **Kit power module** is a combined system of valves used to modulate the amount of heat to recover. With an electronic modulation system of the incoming exhaust fumes, it keeps constant the temperature of the recovered hot water. With an electronic modulation system of the incoming exhaust fumes, it keeps constant the temperature of the recovered hot water. It is essential for a IESI system combined with Genius absorber, or for application that require hot water with constant temperature.

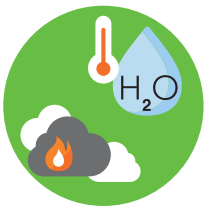

PRINCIPLE OF OPERATION

IESI in its operation, as a heat energy recovery unit, is crossed by the hot fumes that strike the plate-type exchanges and convey the available heat to the water, with temperatures that reach up to 110°C.

The recovery of thermal energy, reach up to 90% and above the source; it depends on the existing plant and the project for the re-use of the heat.

Via the recovery of the sensible heat contained in the fumes and the latent heat (if condensation is required), it is possible to increase the overall efficiency by up to 107%.

These services allow for admission to tax and benefits facilitation, according to the rules and regulation in force

The minimum recommended temperatures of the fluid to recover must exceed 200°

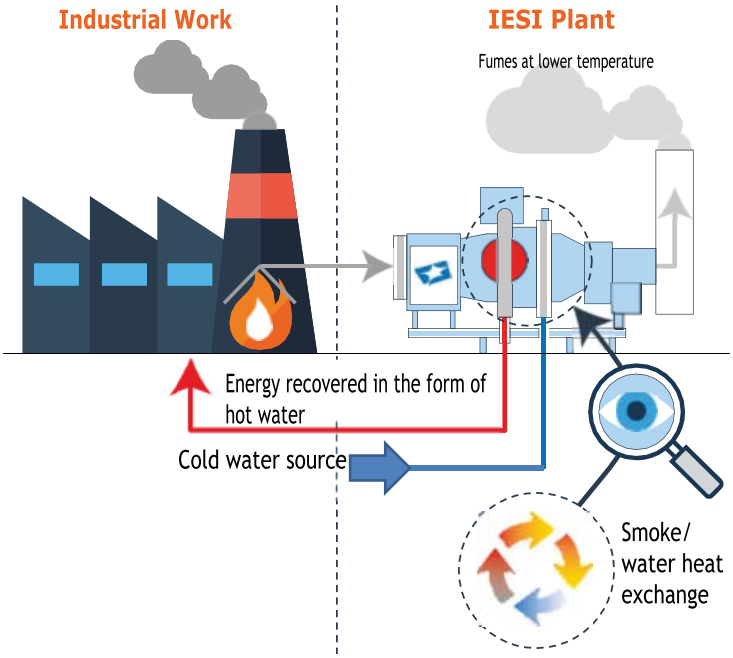

REMOTE MANAGEMENT OF AN IESI INSTALLATION

At the customer's request, energy recovery operators that use **IESI** can be supplied with remote management for remote control.

The remote management software is built ad-hoc for the customer and allows constant control of the various components, with activation / deactivation as well as analysis and monitoring functions.

The picture below, shows a remote management of a IESI system of an our customer, in which you can see some details regarding the work recovery energy of the system, and in particular:

(1) Entry temperature detection point = 415,2 °C
(2) Outlet temperature detection point = 81,4 °C

You can easily understand that the outlet fumes temperature from IESI (point 2) is much lower than the inlet fumes temperature (point 1) withdraw from the fumes of industrial work.

IESI system is running very well. It is recovering from fumes the thermal energy that in another way will be a waste. With IESI isn't necessary spend to produce it.

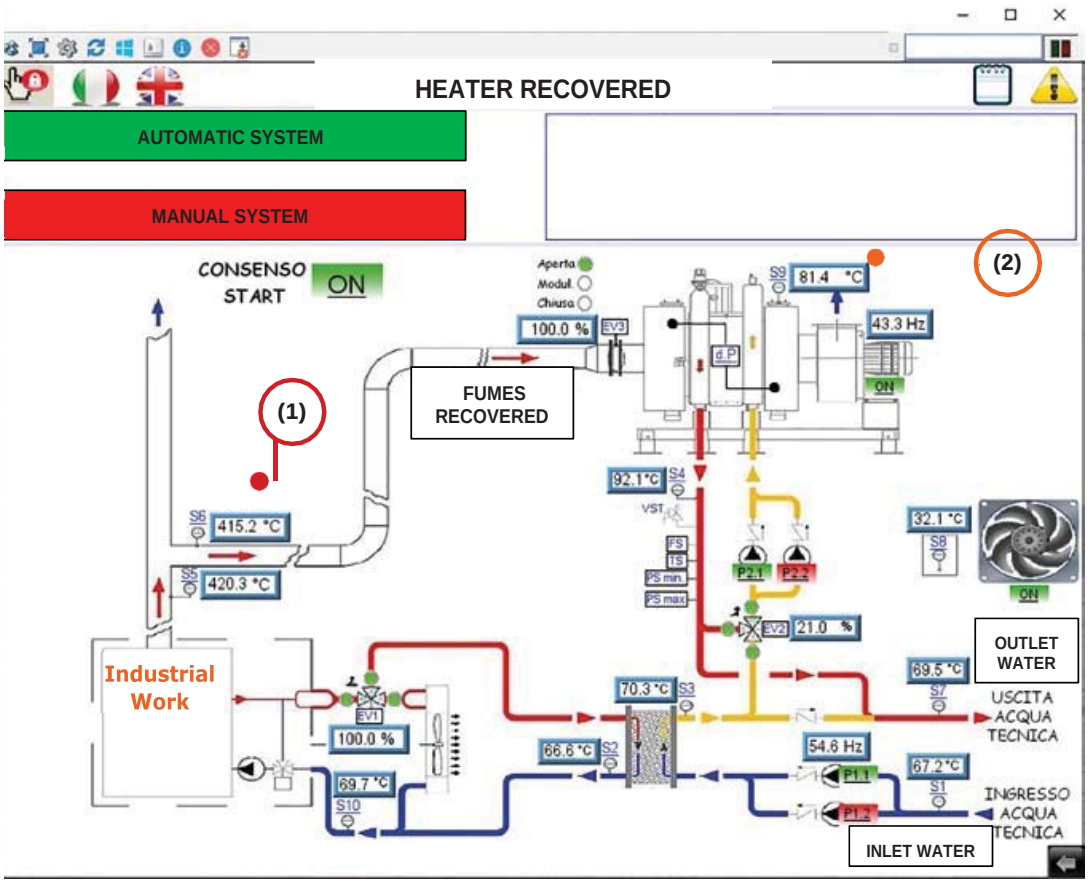

ECONOMIC SYSTEMS COMPARISON

After installation, the IESI system becomes like an energy production system. The heat recovered is a real energy source and used instead of being a waste.

Economic save with IESI

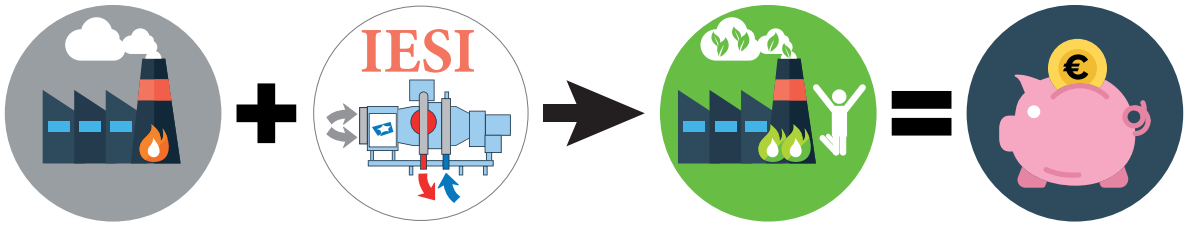

INDUSTRIAL WORK | ENERGY RECOVERED | TOTAL WORK SAVE | ECONOMIC SAVE

Energy Recovery = Economic Save and grows up of results

Return on investment + Ecologic Solution

Costs without IESI

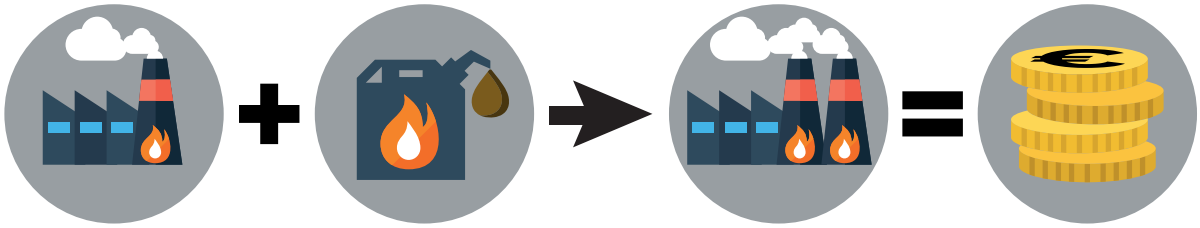

INDUSTRIAL WORK | FURTHER ENERGY | TOTAL WORK | FURTHER COST

Money for further energy = Costs Increases

SAVE = ZERO

The advantage of the **IESI** system increases with increasing use over time, in fact, without **IESI** the energy would be produced in other ways. The energy production with standard methods means costs over time, instead the **IESI**'s thermic energy recovery increase the save day by day, it is free of charge because produced from the waste fumes of combustion or production processes.

STATIC IESI

IESI works at the pressure and flow rate of the fumes induced from the source.
For a correct operation, it is necessary to adequately size and install:

- All the components that interact between the heat source to be recovered and the new use of the recovered heat.
- An Electronic Control System, which is used to control the components that interact between the heat source to be recovered, the STATIC IESI and the management of the recovered thermal energy in output, so that it is constant both in flow and in temperature.
- All the necessary safety equipment in order to guarantee the heat recovery system.

DYNAMIC IESI

It is equipped with an appropriately sized fume exhaust fan which is used to obtain an adequate hyfraulic flow rate and head, in order to guarantee a constant heat recovery over time.
It is set up in its entirety based on the system design and is equipped with all the safety systems and electrical / electronic, mechanical, hydraulic, management and control system.

DYNAMIC IESI is particularly suitable where low heat source conditions prevail.

PACKAGE SOLUTION FOR OUTDOOR: PK

The dimension of this solution is different case by case. It depends on the availability and required values; with an appropriate calculation we are able to size the correct **IESI** components like the stainless steel-plate exchangers, electronic management system, safety system, pumps and so on, in way to assure a perfect and reliable the recovery thermal energy.
IESI is a complete solution to recover energy for the customer

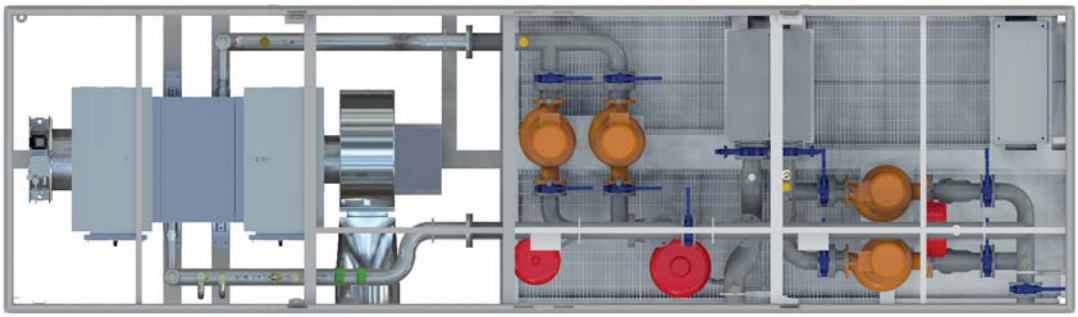

DYNAMIC IESI "CM" VERSION

It transforms the generator with endothermic engine into a cogeneration system

The **DYNAMIC IESI VERSION CM** is able to transform a generating set into a cogeneration system; also adding a Genius absorber, the whole becomes trigenerative group, that is able to supply in addition to electricity and heat, even cold.
The special **"CM"** version, has been studied to be integrated with endothermic engines. Installing **PK IESI** or **IESI CM** version, is possible to use the heat of the endothermic engine exhaust fumes, and the heat of the engine cooling system. In this way **IESI CM** has a greater amount of thermal energy available, and can increase his efficiency.

The heat recovered from **IESI CM** become available for other uses, such as warm or cooling if combined with a Genius absorbing group.

ADDITIONAL KIT

Kit power modul

it is a combined system of valves (2 or 3 way) used to modulate the amount of heat to recover. With an electronic modulation system of the incoming exhaust fumes, it keeps constant the temperature of the recovered hot water. It is a safety system and is essential for a IESI system combined with Genius absorber, or for application that require hot water with constant temperature.

Kit of "Thermal rescue"

it includes some devices necessary to assure a constant thermic power output when the incoming energy is discontinued or not enough for users like radiator fan-coil,and so on…

CLEANING IN 3 EASY STEPS

A clear advantage of IESI is the particular cleaning method designed to make routine maintenance operations simple and fast, necessary to maintain performance efficient and constant over time.
All this is even more evident, when the primary energy sources generate solid combustion residues (e.g. Diesel, biomass, ...)

1. **Switch off IESI and remove the inspection panels**
2. **Clean the heat exchangers with a simple pressure**
3. **Replace the inspection panels and start IESI**

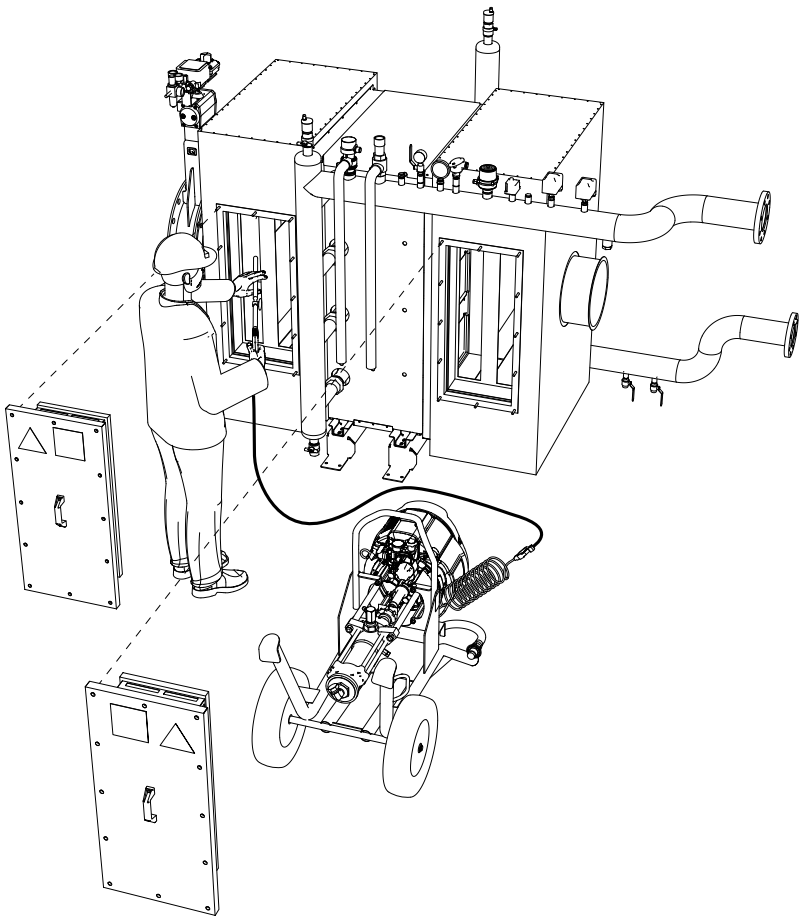

Example diagram: a IESI system in combination with a GENIUS absorber

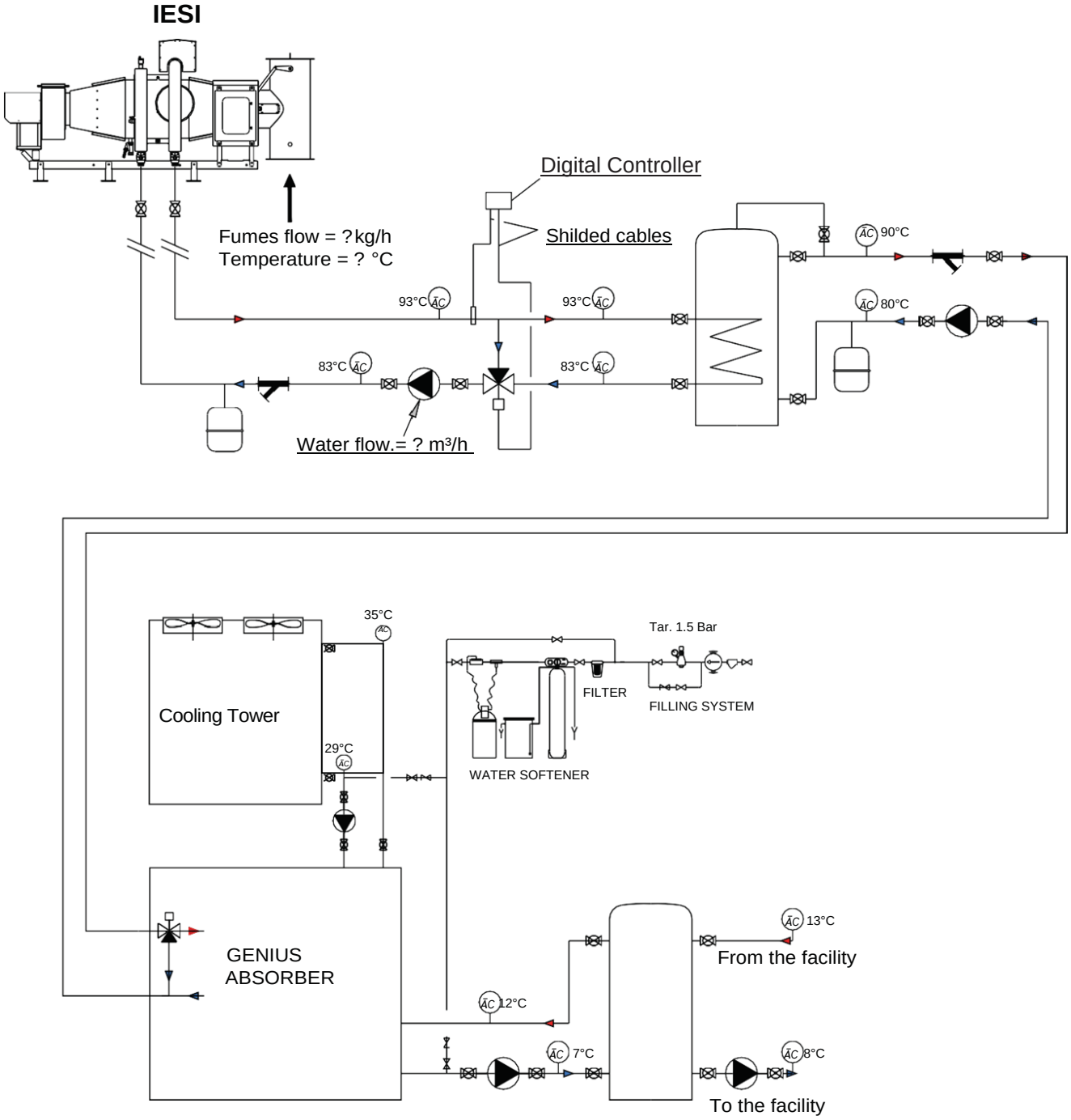

IESI system examples

The data in this leaflet are to be considered indicative and approximate.
Comex Group reserves the right to review without notice.

WE OVERSEE

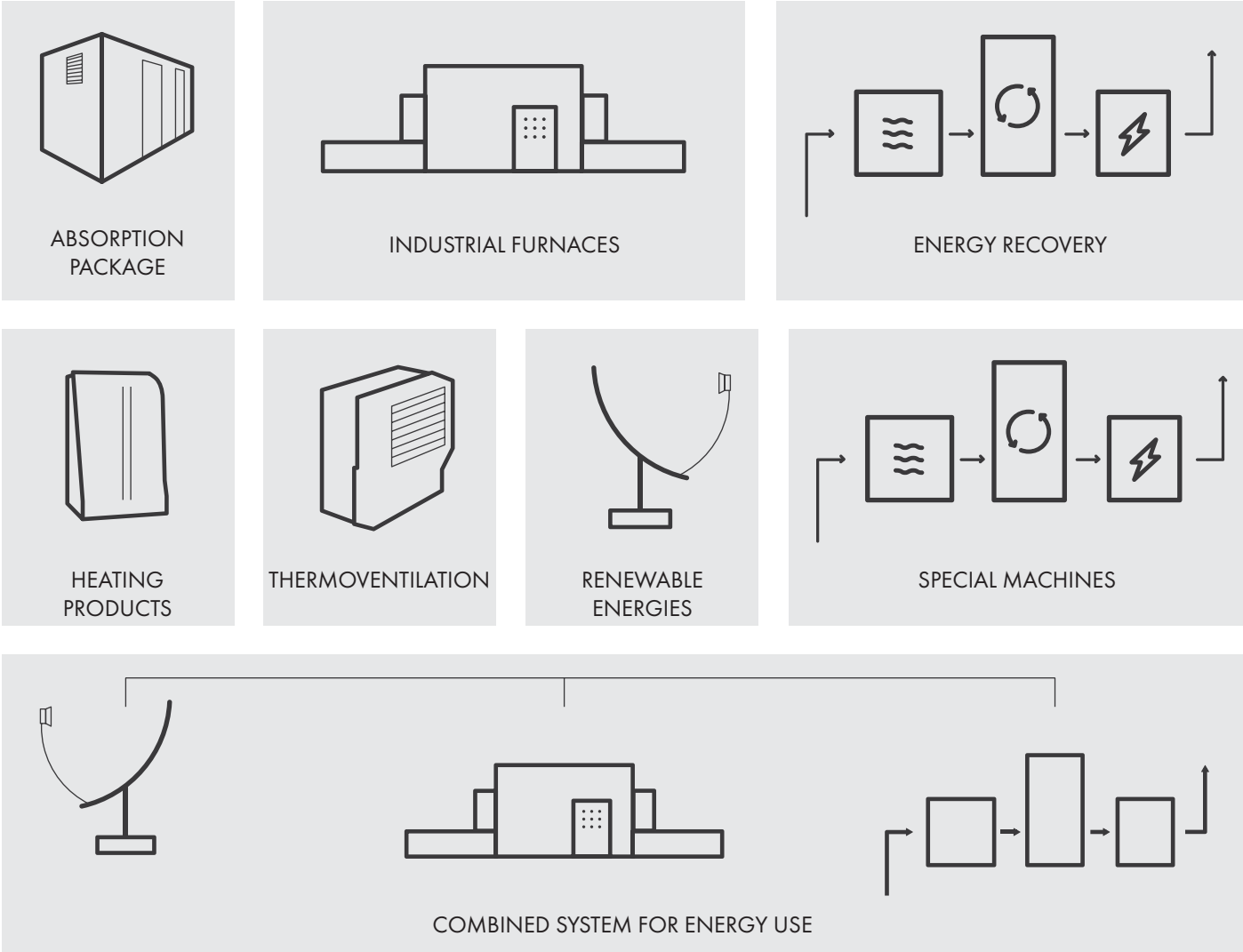

OUR MISSION

Founded in 1987 as a manufacturer of industrial furnaces, **Comex Group** has built his history on a fundamental value: the technological innovation. A feature that, combined with the combustion techniques experience in drying ovens, has been transferred in the production for civil and industrial heating boilers. Research and innovation have marked the company in the heating applied with relevant advantage for Comex Group's customers in order of energy saving, safety and environmental protection.

Comex Group S.r.l. LOREGGIA (PD) Via Europa Unita, 19 Tel. +39 049 9302774 - www.comexgroup.it - info@comexgroup.it